RF-BM-S01 and RF-BM-S01A CC254X Series Bluetooth Low Energy Module

Version 1.0

Shenzhen RF-star Technology Co., Ltd.

May 26th, 2023

All rights reserved. Those responsible for unauthorized reproduction will be prosecuted.

1 Device Overview

1.1 Module Series

There is a series of RF-BM-S01(A) Bluetooth Low Energy modules. All of them are based on TI CC254X (CC2540 and CC2541) SoC series. Because the CC254X series ICs are compatible in package, pins, and peripherals, those modules are pin-to-pin compatible with each other as well.

Table 1. Module Series of RF-BM-S01(A)

Model	Antenna Output Mode	Chip Model	TX Power	FLASH	RAM	Peripherals
S01	PCB onboard	CC2540	+4 dBm	256 KB	8 KB	USB, PWM, ADC, IR, WATCHDOG
S01A	PCB onboard	CC2541	0 dBm	256 KB	8 KB	I2C, PWM, ADC, IR, WATCHDOG

1.2 Description

RF-BM-S01 and RF-BM-S01A are Bluetooth Low Energy (BLE) module based on TI CC254X series, an 8051 core BLE System-on-Chip (SoC). This PCB module integrates a 32 MHz crystal, a 32.768 kHz crystal, an LC balun, an RF matching filter, and a meander line PCB antenna. It is pre-programmed with the BLE 4.2 stack and an application communication protocol. Very low-power sleep modes are available. Short transition times between operating modes further enable low power consumption. RF-BM-S01 is pin-compatible with the RF-BM-S01A in SMT package, if the USB is not used on the RF-BM-S01 and the I^2C/extra I/O is not used on the RF-BM-S01A. Compared to the RF-BM-S01, the RF-BM-S01A provides lower RF current consumption. The RF-BM-S01A does not have the USB interface of the RF-BM-S01, and provides lower maximum output power in TX mode. The RF-BM-S01A also adds a HW I^2C interface.

1.3 Key Features

- RF
  - Bluetooth low energy 4.0 compatible protocol stack for single-mode
  - Excellent link budget (up to 97 dBm), Enabling long-range applications without external front end
  - Accurate Digital Received Signal-Strength Indicator (RSSI)
- Microcontroller
  - High-performance and low-power 8051 microcontroller core
  - In-system-programmable flash of 256 KB
  - 8-KB SRAM
- Peripherals
  - 12 Bit ADC with eight channels and configurable resolution
  - Integrated high-power op-amp and ultra-low power comparator
  - General-purpose timers (one 16-bits, two 8-bits)

- 19 General-purpose I/O pins
- 32 kHz sleep timer with capture
- Two powerful USARTs with support for several serial protocols
- IR generation Circuity
- AES security coprocessor
- Battery monitor and temperature sensor
- RF-BM-S01:
  - Full speed USB interface
  - Each CC2540 contains a unique 48-bit IEEE address
- RF-BM-S01A:
  - I²C interface
  - 2 I/O pins have LED driving capabilities

- Low Power
  - Active mode RX down to 19.6 mA
  - Active mode TX (-6 dBm): 24 mA
  - Power mode 1 (3-μs wake-up): 235 μA
  - Power mode 2 (sleep timer on): 0.9 μA
  - Power mode 3 (external interrupts): 0.4 μA
  - Wide supply voltage range (2 V ~ 3.6 V)
  - Full RAM and register retention in all power modes
- Dimension: 17.4 mm × 13.7 mm SMT Package

1.4 Applications

- 2.4-GHz Bluetooth low energy system
- Mobile phone accessories
- Sports and leisure equipment
- Consumer electronics
- Human interface devices
- Keyboard, mouse
- Remote control
- USB dongles
- Health care and medical
- Smart lighting

1.5 Functional Block Diagram

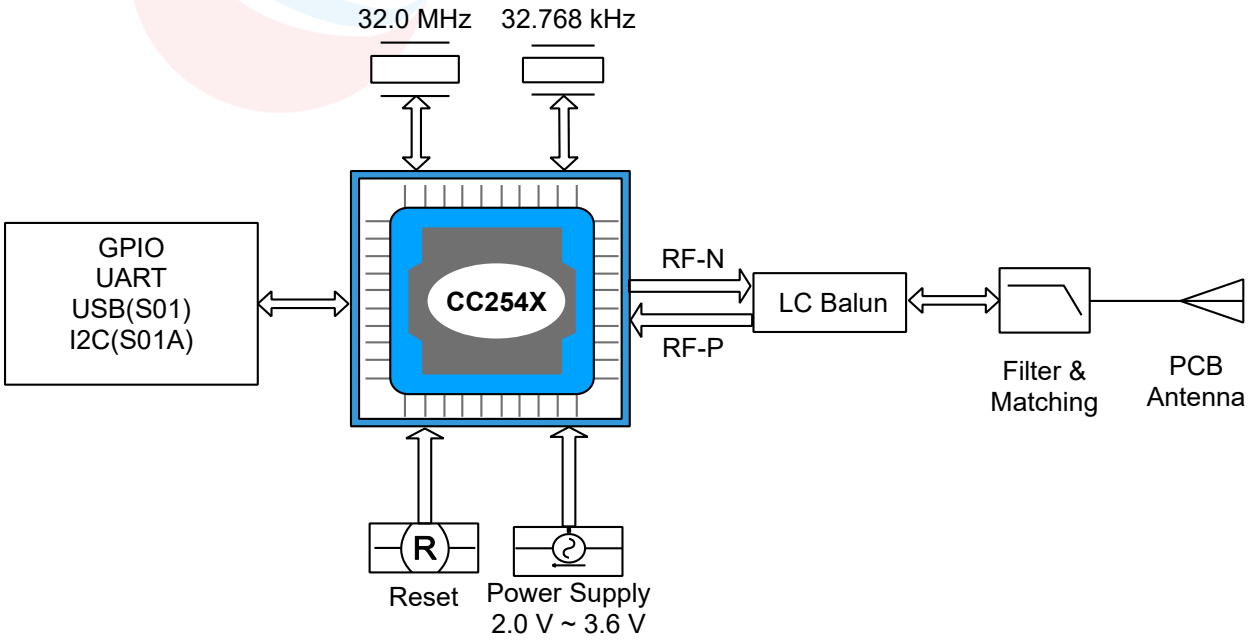

Figure 1. Functional Block Diagram of RF-BM-S01(A)

1.6 Part Number Conventions

The part numbers are of the form of RF-BM-S01(A) where the fields are defined as follows:

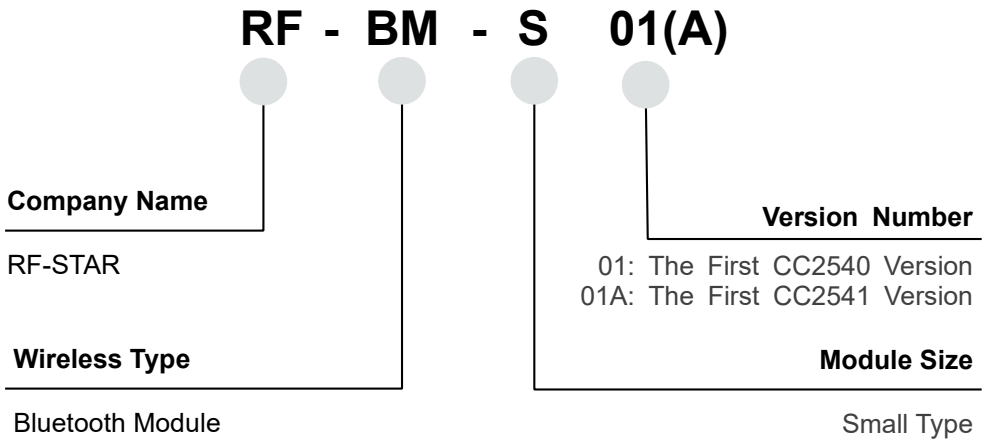

Figure 2. Part Number Conventions of RF-BM-S01(A)

Table of Contents

1 Device Overview 1
1.1 Module Series 1
1.2 Description 1
1.3 Key Features 1
1.4 Applications 2
1.5 Functional Block Diagram 2
1.6 Part Number Conventions 3
Table of Contents 4
2 Module Configuration and Functions 6
2.1 Module Parameters 6
2.2 Module Pin Diagram 7
3.3 Pin Functions 7
3 Specifications 9
3.1 Recommended Operating Conditions 9
3.2 Handling Ratings 9
4 Application, Implementation, and Layout 10
4.1 Module Photos 10
4.2 Recommended PCB Footprint 10
4.3 Schematic Diagram 11
4.4 Reference Design 11
4.5 Antenna 12
4.5.1 Antenna Design Recommendation 12
4.6 Basic Operation of Hardware Design 12
4.7 Trouble Shooting 13
4.7.1 Unsatisfactory Transmission Distance 13
4.7.2 Vulnerable Module 14
4.7.3 High Bit Error Rate 14
4.8 Electrostatics Discharge Warnings 14
4.9 Soldering and Reflow Condition 14
5 Optional Package Specification 16
6 Certification 18

6.1 FCC 18
6.2 CE 18
6.3 RoHS 19
6.4 Reach 19
7 Revision History 20
8 Contact Us 21

2 Module Configuration and Functions

2.1 Module Parameters

Table 2. Parameters of RF-BM-S01(A)

Chipset	RF-BM-S01: CC2540 RF-BM-S01A: CC2541
Supply Power Voltage	2.0 V ~ 3.6 V, recommended to 3.3 V
Frequency	2402 MHz ~ 2480 MHz
Transmit Power	RF-BM-S01: -23.0 dBm ~ +4.0 dBm RF-BM-S01A: -23.0 dBm ~0 dBm
Receiving Sensitivity (low gain mode)	-87 dBm
Receiving Sensitivity (high gain mode)	-93 dBm
GPIO	19
Crystal	32 MHz, 32.768 kHz
RAM	8 KB
Flash	256 KB
Package	SMT Packaging (1.27-mm half-hole pitch stamp stick)
Frequency Error	±20 kHz
Dimension	17.4 mm x 13.7 mm x 1.7 mm
Type of Antenna	PCB antenna
Operating Temperature	-40 ℃ ~ +85 ℃
Storage Temperature	-40 ℃ ~ +125 ℃
RX Current	19.6 mA
TX Current (-6 dBm)	24.0 mA
Power mode 1 (3-μs wake-up)	235 μA
Power mode 2 (sleep timer on)	0.9 μA
Power mode 3 (external interrupts)	0.4 μA

2.2 Module Pin Diagram

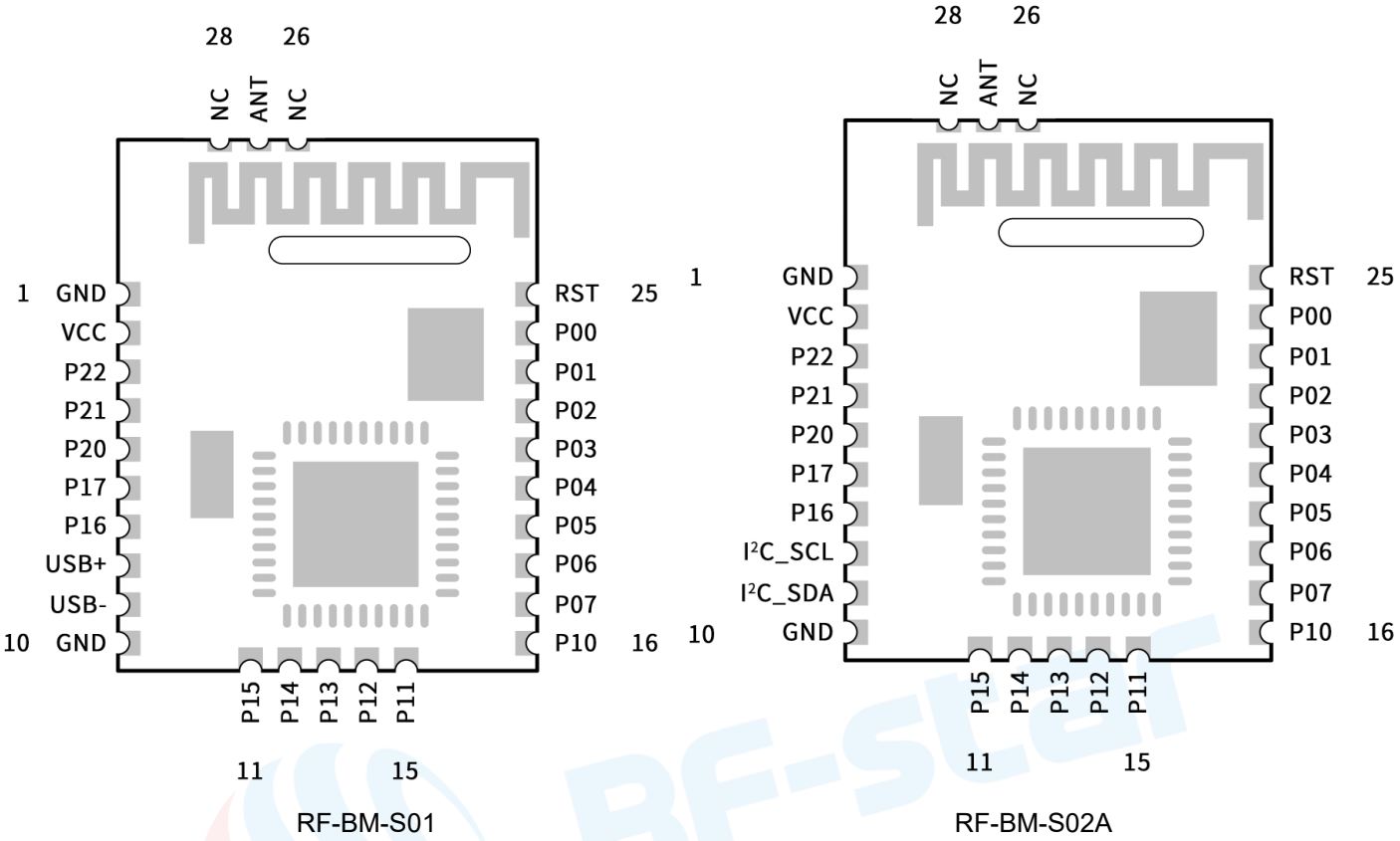

Figure 3. Pin Diagram of RF-BM-S01(A)

3.3 Pin Functions

Table 3. Pin Functions of RF-BM-S01(A)

Pin	Name	Chip Pin	Pin Type	Description
1	GND	-	GND	Ground
2	VCC	-	VCC	Power supply: 2.0 V ~ 3.6 V
3	P22	P2.2	I/O	DEBUG_DC
4	P21	P2.1	I/O	DEBUG_DD
5	P20	P2.0	I/O	
6	P17	P1.7	I/O	
7	P16	P1.6	I/O	
8	USB_P	USB+	I/O	USB_P (For RF-BM-S01)
	I2C_SCL	I2C_SCL	I/O	I²C_SCL (For RF-BM-S01A)
9	USB_N	USB-	I/O	USB_N (For RF-BM-S01)
	I2C_SDA	I2C_SDA	I/O	I²C_SDA (For RF-BM-S01A)

10	GND	GND	GND	Ground
11	P15	P1.5	I/O	
12	P14	P1.4	I/O	
13	P13	P1.3	I/O	
14	P12	P1.2	I/O	
15	P11	P1.1	I/O	
16	P10	P1.0	I/O	
17	P07	P0.7	I/O	
18	P06	P0.6	I/O	
19	P05	P0.5	I/O	
20	P04	P0.4	I/O	
21	P03	P0.3	I/O	
22	P02	P0.2	I/O	
23	P01	P0.1	I/O	
24	P00	P0.0	I/O	
25	RESET	RST	RESET	Reset, active low.
26	NC	-	NC	
27	ANT	-	ANT	External antenna
28	NC	-	NC	

3 Specifications

3.1 Recommended Operating Conditions

Functional operation does not guarantee performance beyond the limits of the conditional parameter values in the table below. Long-term work beyond this limit will affect the reliability of the module more or less.

Table 4. Recommended Operating Conditions of RF-BM-S01(A)

Items	Condition	Min.	Typ.	Max.	Unit
Operating Supply Voltage	Battery Mode	2.0	3.3	3.6	V
Operating Temperature	/	-40	+25	+85	℃
Environmental Hot Pendulum	/	-20		+20	℃/min

3.2 Handling Ratings

Table 5. Handling Ratings of RF-BM-S01(A)

Items	Condition	Min.	Typ.	Max.	Unit
Storage Temperature	Tstg	-40	+25	+125	℃
Human Body Model	HBM		±2000		V
Moisture Sensitivity Level			3		
Charged Device Model			±750		V

4 Application, Implementation, and Layout

4.1 Module Photos

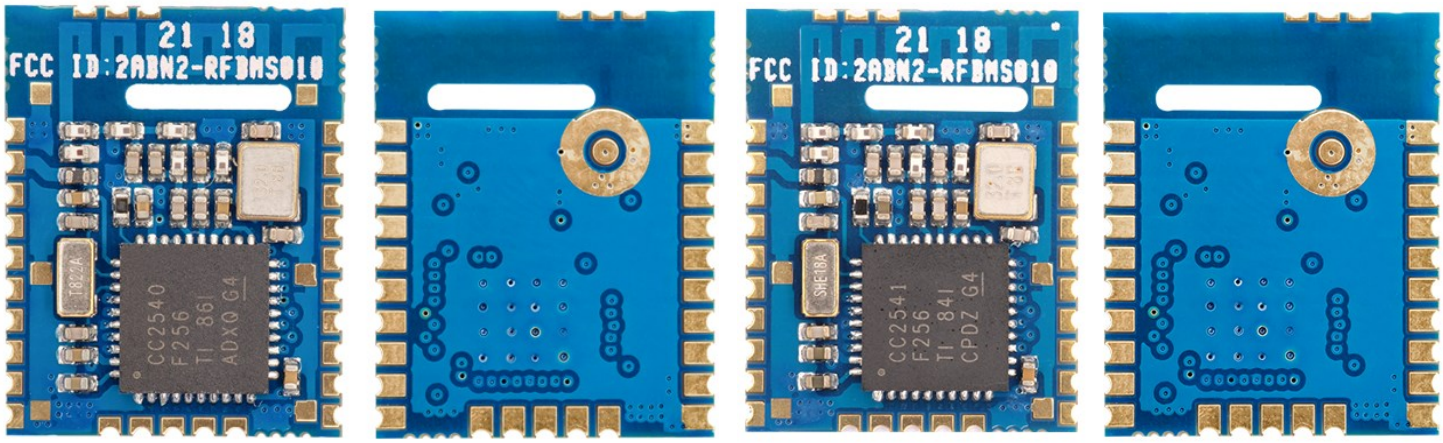

RF-BM-S01 RF-BM-S01A

Figure 4. Photos of RF-BM-S01(A)

4.2 Recommended PCB Footprint

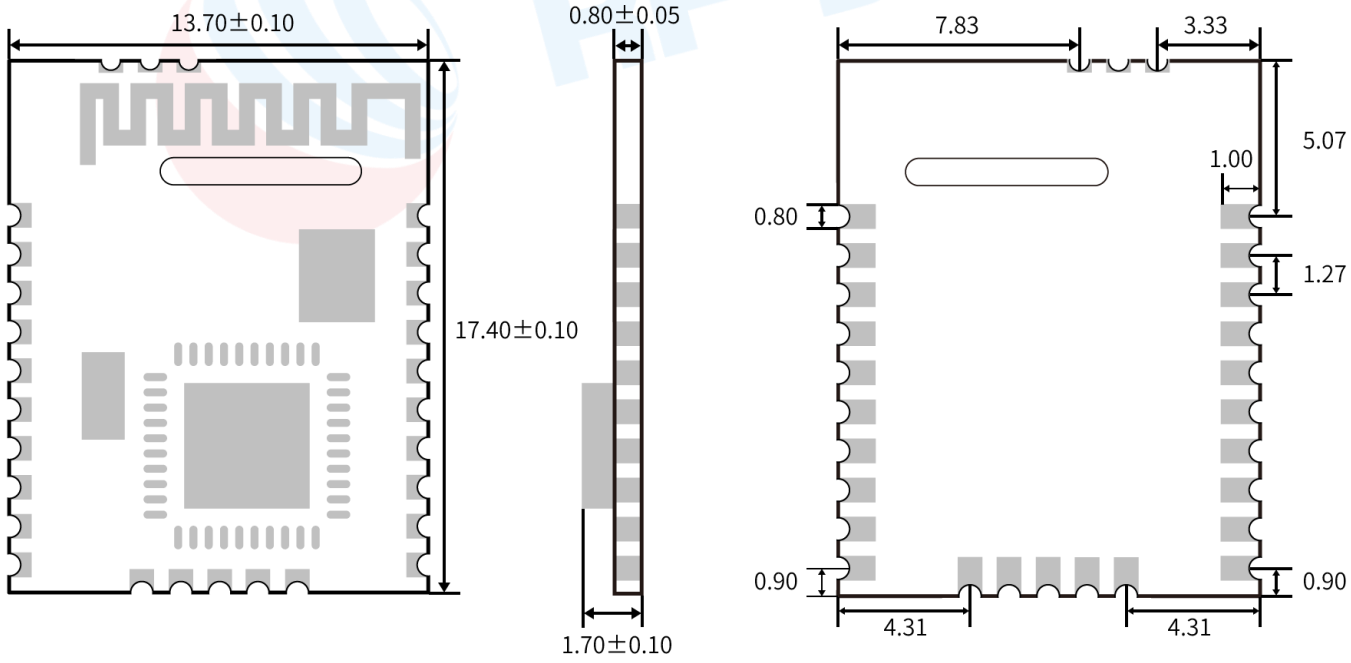

Figure 5. Recommended PCB Footprint of RF-BM-S01(A) (mm)

4.3 Schematic Diagram

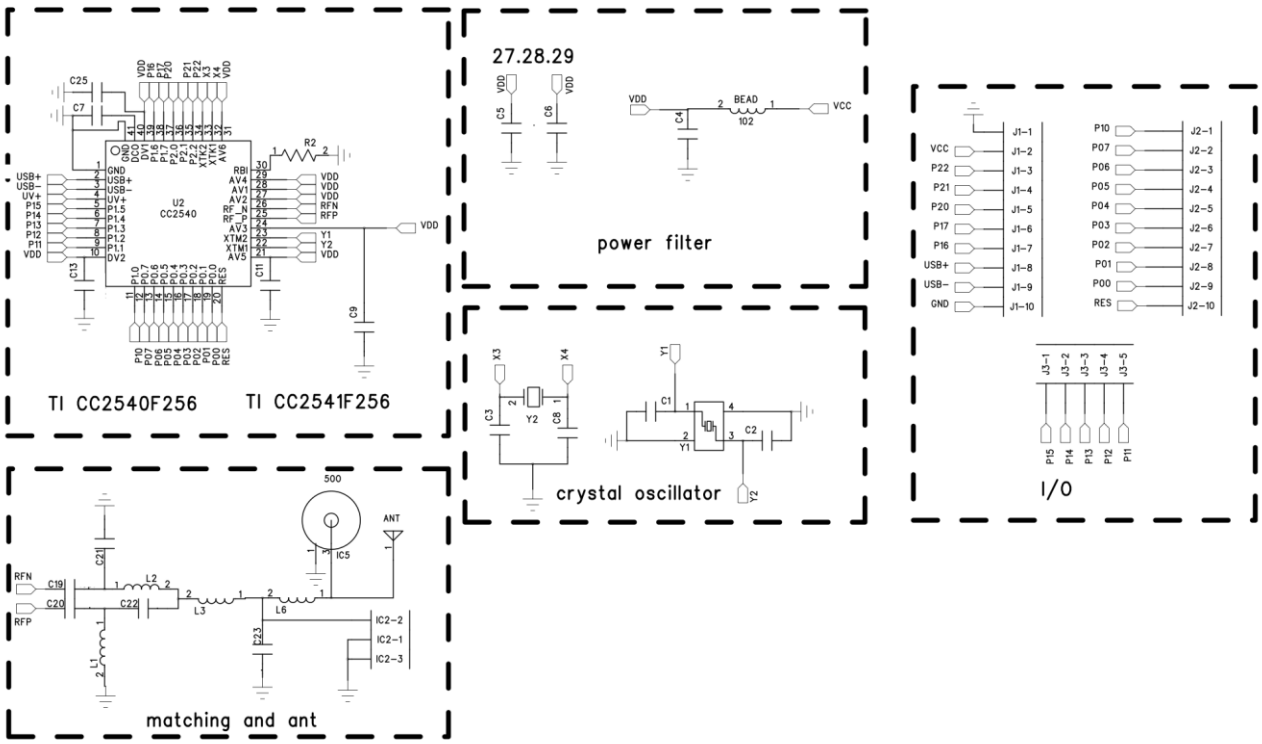

Figure 6. Schematic Diagram of RF-BM-S01(A)

4.4 Reference Design

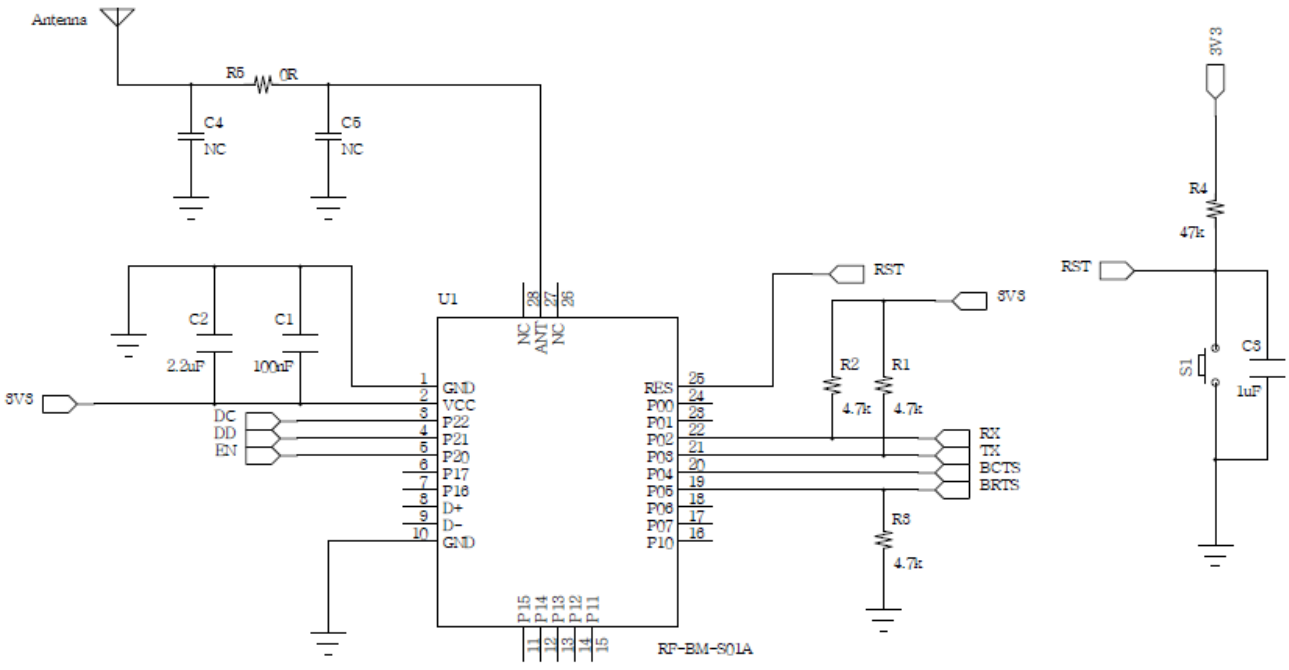

Note: EN low active.

Figure 7. Reference Design of RF-BM-S01(A)

4.5 Antenna

4.5.1 Antenna Design Recommendation

1. The antenna installation structure has a great influence on the module performance. It is necessary to ensure the antenna is exposed and preferably vertically upward. When the module is installed inside of the case, a high-quality antenna extension wire can be used to extend the antenna to the outside of the case.
2. The antenna must not be installed inside the metal case, which will cause the transmission distance to be greatly weakened.
3. The recommendation of antenna layout.

   The inverted-F antenna position on PCB is free-space electromagnetic radiation. The location and layout of the antenna are key factors to increase the data rate and transmission range.

   Therefore, the layout of the module antenna location and routing is recommended as follows:

   1. Place the antenna on the edge (corner) of the PCB.
   2. Make sure that there is no signal line or copper foil in each layer below the antenna.
   3. It is best to hollow out the antenna position in the following figure to ensure that the S11 of the module is minimally affected.

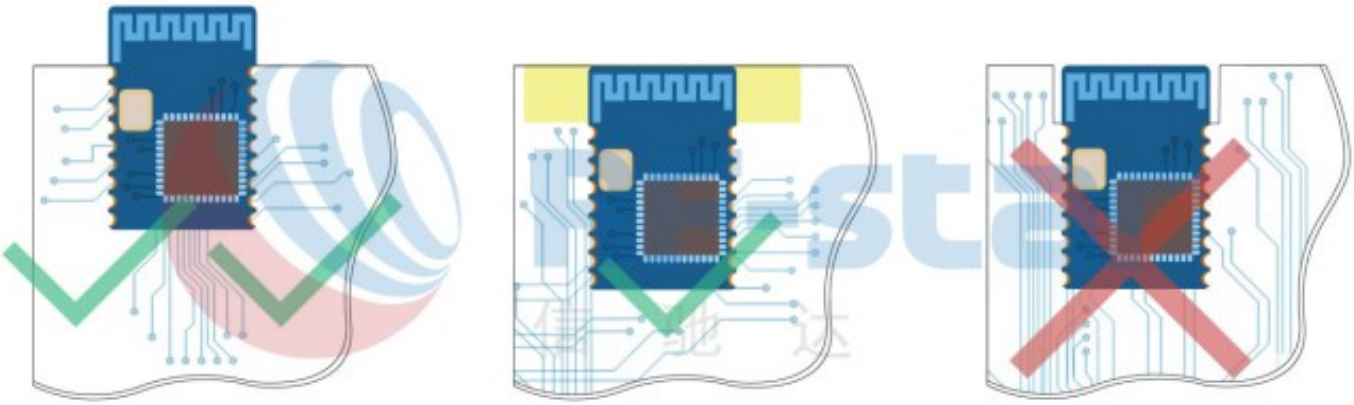

Figure 8. Recommendation of Antenna Layout

Note: The hollow-out position is based on the antenna used.

4.6 Basic Operation of Hardware Design

1. It is recommended to offer the module a DC stabilized power supply, a tiny power supply ripple coefficient, and reliable ground. Please pay attention to the correct connection between the positive and negative poles of the power supply. Otherwise, the reverse connection may cause permanent damage to the module;
2. Please ensure the supply voltage is between the recommended values. The module will be permanently damaged if the voltage exceeds the maximum value. Please ensure a stable power supply and no frequently fluctuating voltage.

3. When designing the power supply circuit for the module, it is recommended to reserve more than 30% of the margin, which is beneficial to the long-term stable operation of the whole machine. The module should be far away from the power electromagnetic, transformer, high-frequency wiring, and other parts with large electromagnetic interference.
4. The bottom of the module should avoid high-frequency digital routing, high-frequency analog routing, and power routing. If it has to route the wire on the bottom of the module, for example, it is assumed that the module is soldered to the Top Layer, the copper must be spread on the connection part of the top layer and the module, and be close to the digital part of the module and routed in the Bottom Layer (all copper is well-grounded).
5. Assuming that the module is soldered or placed in the Top Layer, it is also wrong to randomly route the Bottom Layer or other layers, which will affect the spurs and receiving sensitivity of the module to some degree;
6. Assuming that there are devices with large electromagnetic interference around the module, which will greatly affect the module performance. It is recommended to stay away from the module according to the strength of the interference. If circumstances permit, appropriate isolation and shielding can be done.
7. Assuming that there are routings of large electromagnetic interference around the module (high-frequency digital, high-frequency analog, power routings), which will also greatly affect the module performance. It is recommended to stay away from the module according to the strength of the interference. If circumstances permit, appropriate isolation and shielding can be done.
8. It is recommended to stay away from the devices whose TTL protocol is the same 2.4 GHz physical layer, for example, USB 3.0.

4.7 Trouble Shooting

4.7.1 Unsatisfactory Transmission Distance

1. When there is a linear communication obstacle, the communication distance will be correspondingly weakened. Temperature, humidity, and co-channel interference will lead to an increase in the communication packet loss rate. The performance of ground absorption and reflection of radio waves will be poor when the module is tested close to the ground.
2. Seawater has a strong ability to absorb radio waves, so the test results by the seaside are poor.
3. The signal attenuation will be very obvious if there is metal near the antenna or if the module is placed inside the metal shell.
4. The incorrect power register set or the high data rate in the open air may shorten the communication distance. The higher the data rate, the closer the distance.
5. The low voltage of the power supply is lower than the recommended value at ambient temperature, and the lower the voltage, the smaller the power is.
6. The unmatchable antennas and modules or the poor quality of the antenna will affect the communication distance.

4.7.2 Vulnerable Module

1. Please ensure the supply voltage is between the recommended values. The module will be permanently damaged if the voltage exceeds the maximum value. Please ensure a stable power supply and no frequently fluctuating voltage.
2. Please ensure the anti-static installation and the electrostatic sensitivity of high-frequency devices.
3. Due to some humidity-sensitive components, please ensure suitable humidity during installation and application. If there is no special demand, it is not recommended to use at too high or too low temperature.

4.7.3 High Bit Error Rate

1. There are co-channel signal interferences nearby. It is recommended to be away from the interference sources or modify the frequency and channel to avoid interferences.
2. The unsatisfactory power supply may also cause garbled. It is necessary to ensure the power supply's reliability.
3. If the extension wire or feeder wire is of poor quality or too long, the bit error rate will be high.

4.8 Electrostatics Discharge Warnings

The module will be damaged by the discharge of static. RF-star suggests that all modules should follow the 3 precautions below:

1. According to the anti-static measures, bare hands are not allowed to touch modules.
2. Modules must be placed in anti-static areas.
3. Take the anti-static circuitry (when inputting HV or VHF) into consideration in product design.
   Static may result in the degradation in performance of the module, even causing failure.

4.9 Soldering and Reflow Condition

1. Heating method: Conventional Convection or IR/convection.
2. Solder paste composition: Sn96.5/Ag3.0/Cu0.5
3. Allowable reflow soldering times: 2 times based on the following reflow soldering profile.
4. Temperature profile: Reflow soldering shall be done according to the following temperature profile.
5. Peak temperature: 245 ℃.

Table 6. Temperature Table of Soldering and Reflow

Profile Feature	Sn-Pb Assembly	Pb-Free Assembly
Solder Paste	Sn63 / Pb37	Sn96.5 / Ag3.0 / Cu0.5
Min. Preheating Temperature (T_{min})	100 ℃	150 ℃
Max. Preheating Temperature (T_{max})	150 ℃	200 ℃
Preheating Time (T_{min} to T_{max}) (t_1)	60 s ~ 120 s	60 s ~ 120 s

Average Ascend Rate (T_{max} to T_p)	Max. 3 ℃/s	Max. 3 ℃/s
Liquid Temperature (T_L)	183 ℃	217 ℃
Time above Liquidus (t_L)	60 s ~ 90 s	30 s ~ 90 s
Peak Temperature (T_p)	220 ℃ ~ 235 ℃	230 ℃ ~ 250 ℃
Average Descend Rate (T_p to T_{max})	Max. 6 ℃/s	Max. 6 ℃/s
Time from 25 ℃ to Peak Temperature (t_2)	Max. 6 minutes	Max. 8 minutes
Time of Soldering Zone (t_P)	20±10 s	20±10 s

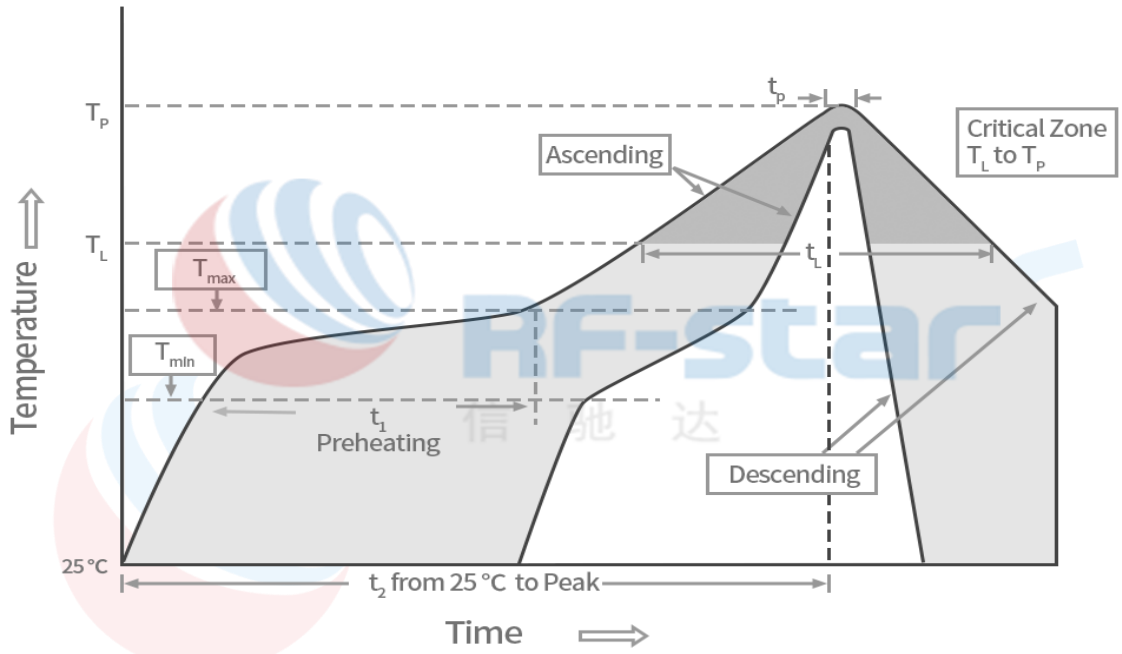

Figure 9. Recommended Reflow for Lead-Free Solder

5 Optional Package Specification

The default package method is ***by tray***. If you need the modules to be shipped by tape & reel, pls contact us in advance.

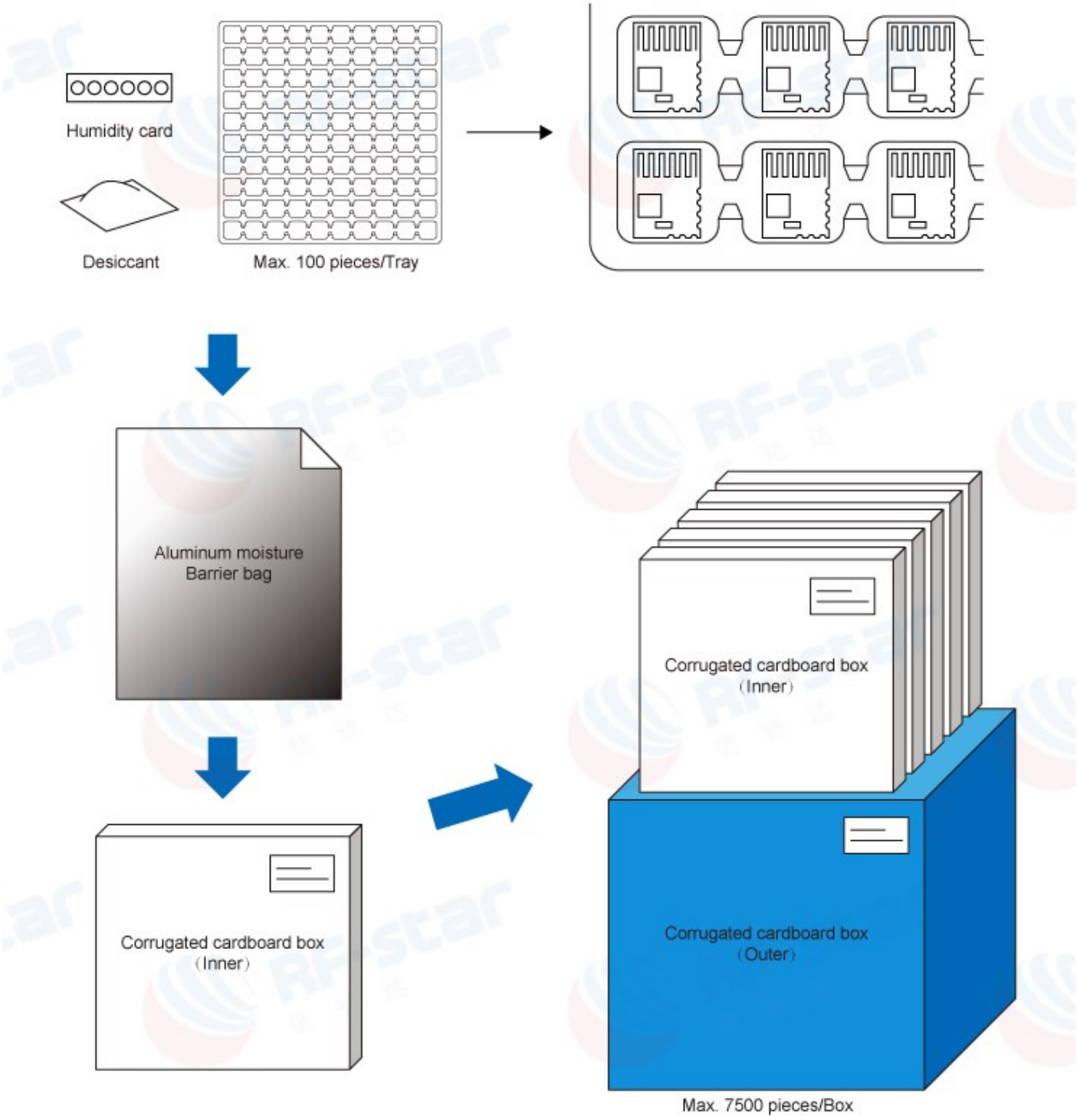

Figure 10. Default Package by Tray

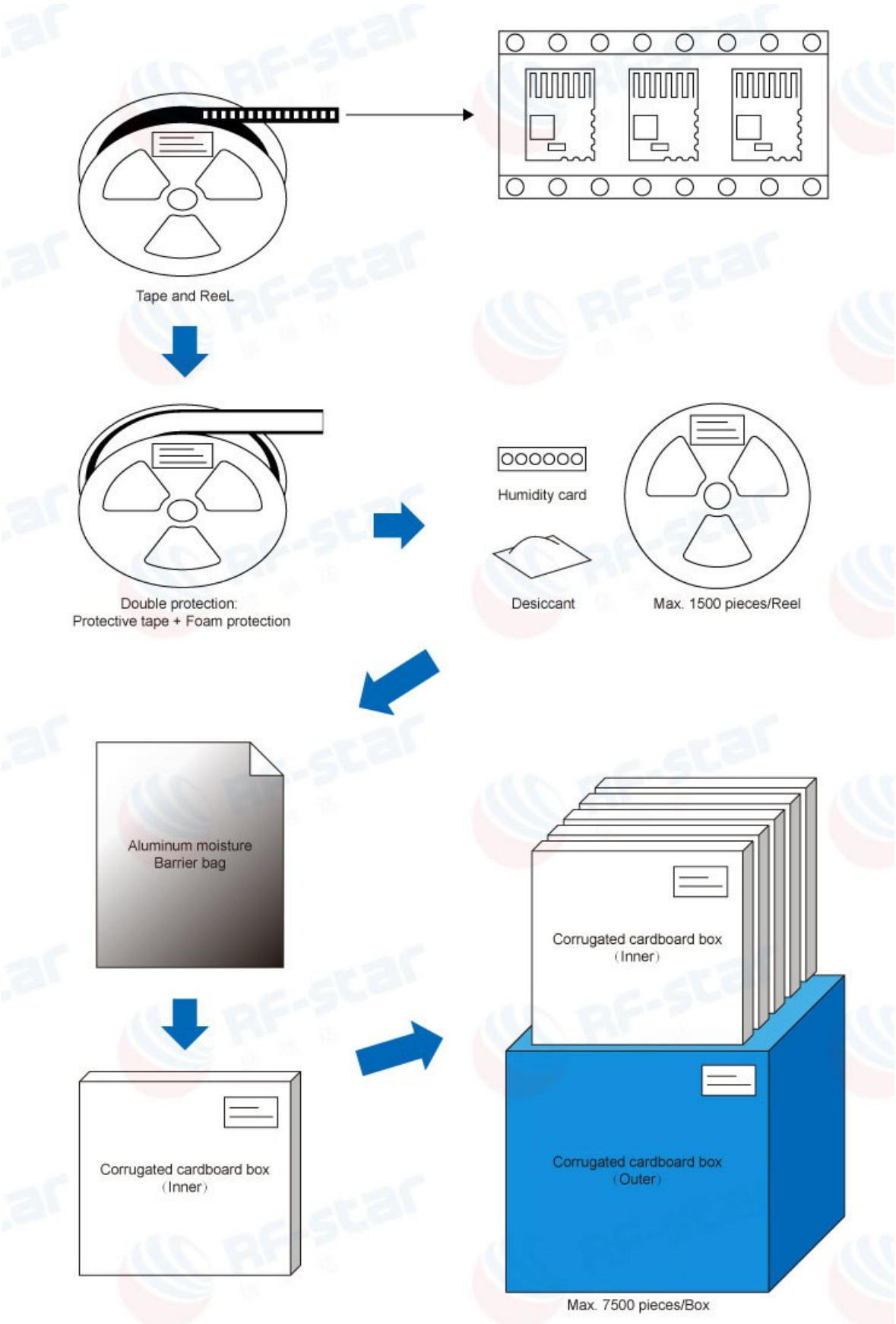

Figure 11. Package by Tape & Reel

6 Certification

6.1 FCC

This device complies with part 15 of the FCC Rules. Operation is subject to the following two conditions: (1) This device may not cause harmful interference, and (2) this device must accept any interference received, including interference that may cause undesired operation.

FCC Identifier: 2ABN2-RFBMS01

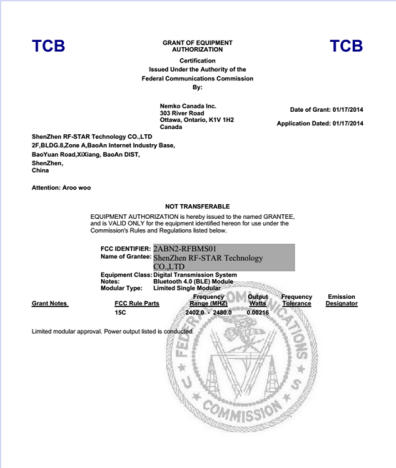

TCB GRANT OF EQUIPMENT AUTHORIZATION TCB

Certification

Issued Under the Authority of the Federal Communications Commission By:

Nemko Canada Inc.
303 River Road
Ottawa, Ontario, K1V 1H2
Canada

Date of Grant: 01/17/2014
Application Dated: 01/17/2014

ShenZhen RF-STAR Technology CO.,LTD
2F,BLDG.8,Zone A,BaoAn Internet Industry Base,
BaoYuan Road,XiXiang, BaoAn DIST,
ShenZhen,
China

Attention: Aroo woo

NOT TRANSFERABLE

EQUIPMENT AUTHORIZATION is hereby issued to the named GRANTEE, and is VALID ONLY for the equipment identified hereon for use under the Commission's Rules and Regulations listed below.

FCC IDENTIFIER: 2ABN2-RFBMS01
Name of Grantee: ShenZhen RF-STAR Technology CO.,LTD
Equipment Class: Digital Transmission System
Notes: Bluetooth 4.0 (BLE) Module
Modular Type: Limited Single Modular

Grant Notes	FCC Rule Parts	Frequency Range (MHz)	Output Watts	Frequency Tolerance	Emission Designator
	15C	2402.0 - 2480.0	0.00215		

Limited modular approval. Power output listed is conducted

Figure 12. FCC Certificate

6.2 CE

CE Verification No.: CCISE170703201V

CCIS Shenzhen Zhongjian Nanfang Testing Co., Ltd.

VERIFICATION OF CONFORMITY

Verification No:	CCISE170703201V
Applicant:	SHENZHEN RF STAR TECHNOLOGY CO.,LTD.
Address of Applicant:	2F, Block8, Dist.A, Internet Industry Base, Baoyuan Road, Baoan Dist, Shenzhen, China
Product Name:	Bluetooth Module
Model No.:	RF-BM-S01, RF-BM-S01A
Sufficient samples of the product have been tested and found to be in conformity with	
Applicable standards:	Draft ETSI EN 301 489-1 V2.2.0 (2017-03), Draft ETSI EN 301 489-17 V3.2.0 (2017-03), ETSI EN 300 328 V2.1.1 (2016-11), EN 62479:2010, EN 60950-1: 2006+ A11:2009 + A1:2010+ A12:2011+A2:2013
As shown in the Test report number(s):	CCISE170703201, CCISE170703202, CCISE170703203, CCISS170703901

Based on a review of the test report detailed above, this apparatus has met the requirements of the above standards and hence has been properly demonstrated that the requirement of the directive have been fulfilled. The product is in conformity with the article 3.1(a) the requirements of safety and article 3.1(b) the requirements of EMC and article 3.2 requirements of radio equipment in Directive 2014/53/EU.

The CE mark as shown below can be used, under the responsibility of the manufacturer, after completion of an EC Declaration of Conformity and compliance with all relevant EC Directives. The affixing of the CE marking presumes in addition that the conditions in all relative Directives are fulfilled.

Bruce Zhang
Laboratory Manager
02 Aug., 2017

Copyright of this verification is owned by Shenzhen Zhongjian Nanfang Testing Co., Ltd. and may not be reproduced other than in full and with the prior approval of the General Manager. This verification is subjected to the governance of the General Conditions of Services, printed overleaf.

Address: No. B-C, 1/F., Building 2, Laodong No.2 Industrial Park, Xixiang Road, Bao'an District, Shenzhen, Guangdong, China
Telephone: +86 (0) 755 2311 8282, Fax: +86 (0) 755 2311 6366, Website: www.ccis-cb.com

Figure 13. CE Certificate

6.3 RoHS

RoHS Report No.: U00711709219520-1

Query Password: QW3903

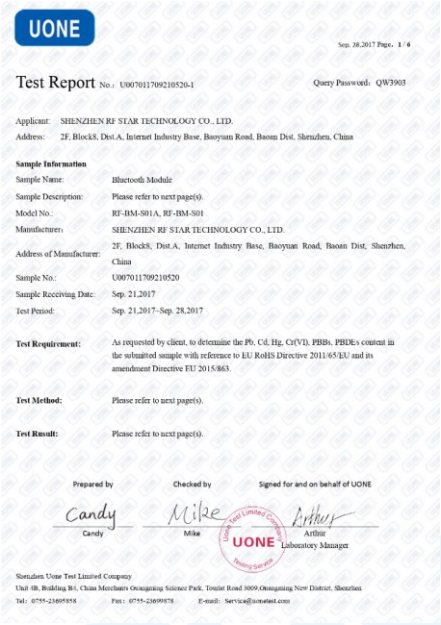

UONE

Sep. 28,2017 Page. 1 / 4

Test Report No.: U00711709210520-1 Query Password: QW3903

Applicant: SHENZHEN RF STAR TECHNOLOGY CO., LTD.
Address: 2F, Block8, Dist.A, Internet Industry Base, Baoyuan Road, Baoan Dist, Shenzhen, China

Sample Information

Sample Name:	Bluetooth Module
Sample Description:	Please refer to next page(s).
Model No.:	RF-BM-S01A, RF-BM-S01
Manufacturer:	SHENZHEN RF STAR TECHNOLOGY CO., LTD.
Address of Manufacturer:	2F, Block8, Dist.A, Internet Industry Base, Baoyuan Road, Baoan Dist, Shenzhen, China
Sample No.:	U00701170921052O
Sample Receiving Date:	Sep. 21,2017
Test Period:	Sep. 21,2017~Sep. 28,2017
Test Requirement:	As requested by client, to determine the Pb, Cd, Hg, Cr(VI), PBBs, PBDEs content in the submitted sample with reference to EU RoHS Directive 2011/65/EU and its amendment Directive EU 2015/863.
Test Method:	Please refer to next page(s).
Test Result:	Please refer to next page(s).

Prepared by Checked by Signed for and on behalf of UONE

Candy Mike Arthur

UONE Laboratory Manager

Shenzhen Uone Test Limited Company
Unit 4B, Building B1, China Merchants Guangming Science Park, Tourist Road 3009,Guangming New District, Shenzhen
Tel: 0755-23695858 Fax: 0755-23699878 E-mail: Service@uonetest.com

Figure 14. RoHS Certificate

6.4 Reach

Reach Test Report No.: C150918025001

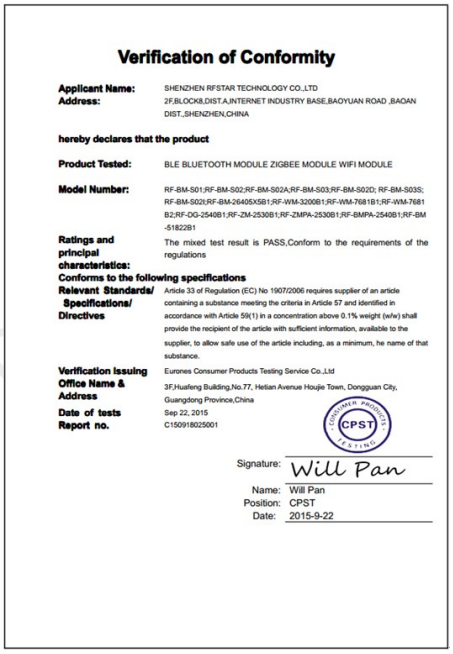

Verification of Conformity

Applicant Name:	SHENZHEN RFSTAR TECHNOLOGY CO.,LTD
Address:	2F,BLOCK8,DIST.A,INTERNET INDUSTRY BASE,BAOYUAN ROAD ,BAOAN DIST.,SHENZHEN,CHINA
hereby declares that the product	
Product Tested:	BLE BLUETOOTH MODULE ZIGBEE MODULE WIFI MODULE
Model Number:	RF-BM-S01;RF-BM-S02;RF-BM-S02A;RF-BM-S03;RF-BM-S02D; RF-BM-S03S; RF-BM-S02I;RF-BM-26405X5B1;RF-WM-3200B1;RF-WM-7681B1;RF-WM-7681B2;RF-DG-2540B1;RF-ZM-2530B1;RF-ZMPA-2530B1;RF-BMPA-2540B1;RF-BM-51822B1
Ratings and principal characteristics:	The mixed test result is PASS,Conform to the requirements of the regulations
Conforms to the following specifications	
Relevant Standards/ Specifications/ Directives	Article 33 of Regulation (EC) No 1907/2006 requires supplier of an article containing a substance meeting the criteria in Article 57 and identified in accordance with Article 59(1) in a concentration above 0.1% weight (w/w) shall provide the recipient of the article with sufficient information, available to the supplier, to allow safe use of the article including, as a minimum, he name of that substance.
Verification Issuing Office Name & Address	Eurones Consumer Products Testing Service Co.,Ltd 3F,Huafeng Building,No.77, Hetian Avenue Houjie Town, Dongguan City, Guangdong Province,China
Date of tests	Sep 22, 2015
Report no.	C150918025001

Signature: Will Pan

Name: Will Pan
Position: CPST
Date: 2015-9-22

Figure 15. Reach Certificate

7 Revision History

Date	Version No.	Description
2018.01.23	V1.0	The initial version is released.
2018.02.07	V1.0	Update module picture.
2018.02.26	V1.0	Update module operating and storage temperature range.
2018.08.02	V1.0	Update company address.
2023.05.26	V1.0	Update MSL level. Update the Shenzhen office address.

Note:

1. The document will be optimized and updated from time to time. Before using this document, please make sure it is the latest version.
2. To obtain the latest document, please download it from the official website: www.rfstariot.com and www.szrfstar.com.

8 Contact Us

SHENZHEN RF-STAR TECHNOLOGY CO., LTD.

Shenzhen HQ:

Add.: Room 502, Podium Building No. 12, Shenzhen Bay Science and Technology Ecological Park, Nanshan District, Shenzhen, Guangdong, China, 518063

Tel.: 86-755-8632 9829

Chengdu Branch:

Add.: N2-1604, Global Center, North No. 1700, Tianfu Avenue, Hi-Tech District, Chengdu, Sichuan, China, 610095

Tel.: 86-28-8692 5399

Email: sunny@szrfstar.com, sales@szrfstar.com

Web.: www.rfstariot.com, www.szrfstar.com